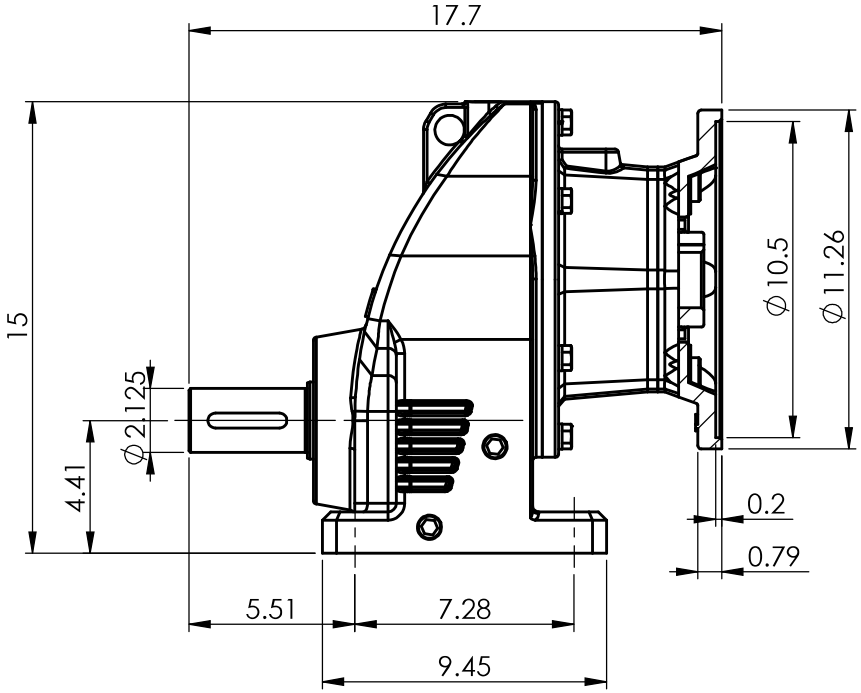

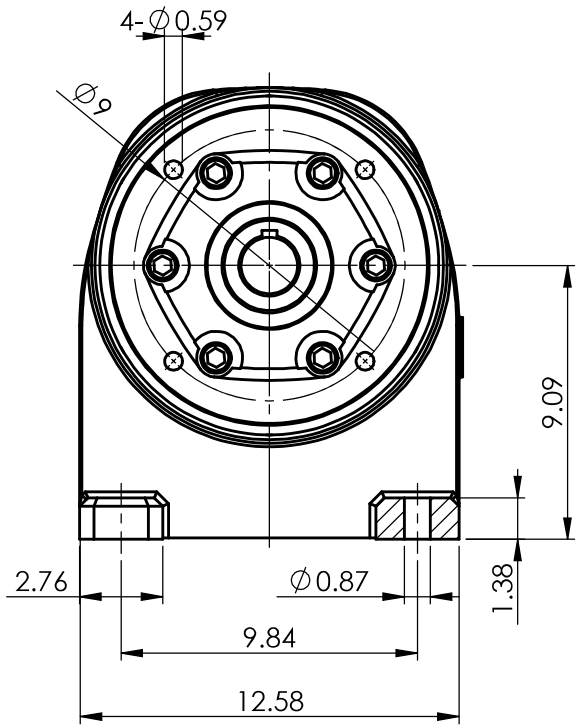

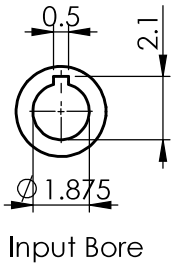

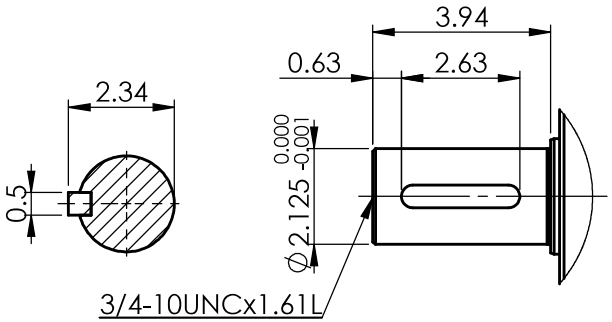

Output Shaft

NO.	PART NO.	MATERIAL	PC	RAW MATERIAL	WEIGHT	NOTE

SCABBLE TOLERANCE
>0 ± 0.1
>6 ± 0.2
>30 ± 0.3
>120 ± 0.5
>315 ± 0.8

MACHINING REQUIRED
~ NO-MACHINING
▽ 50S
▽▽ 25S
▽▽▽ 6S
ANG. TOLERANCE±0.5

	DATE	NAME
DWG.	2014.07.18	JOENG
DESN.		
APPR.		
SCALE	1:6	

WORLDWIDE

TITLE: WINL97-284/6TC(1-STAGE)

DWG. NO.: RX097 REV. A

NO.	SECTION	ORIGIN	MODIFICATION	DATE	IN CHARGE